HEXAGON FED3+ Torsion Spring Calculation V15.4

Illustrated: leg bended, ext.

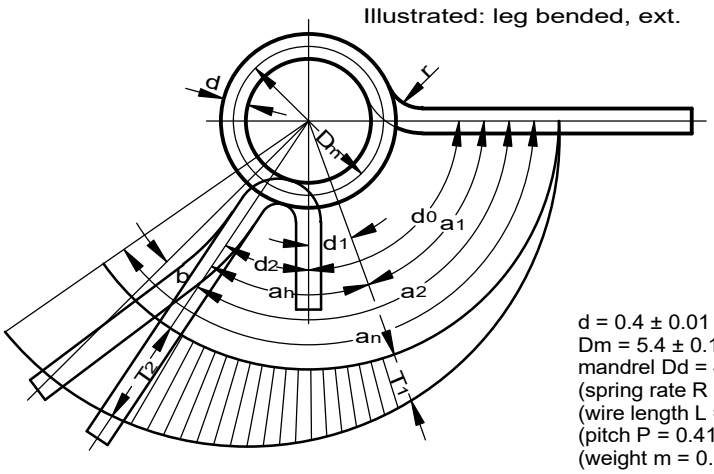

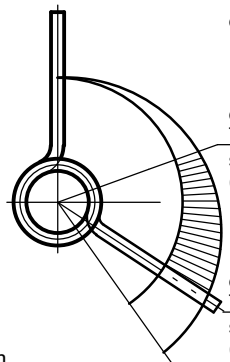

delta 0 = 90 ± 26.5 deg.

delta 1 = 75 deg.
T1 = 0.867 ± 1.44 Nmm
sigma q1 = 138 MPa
(alpha 1 = 15 (15) deg.)

delta 2 = 55 deg.
T2 = 2.023 ± 1.44 Nmm
sigma q2 = 322 MPa
(alpha 2 = 35 (35) deg.)

delta n = -82.75 deg.
Tn = 9.987 Nmm
sigma n = 1589 MPa
(alpha n = 172.8 deg.)

d = 0.4 ± 0.01 mm
Dm = 5.4 ± 0.15 mm
mandrel Dd = 4.5 mm
(spring rate R = 0.0578 Nmm/deg.)
(wire length L = 104.1 mm)
(pitch P = 0.412 mm)
(weight m = 0.103 g)

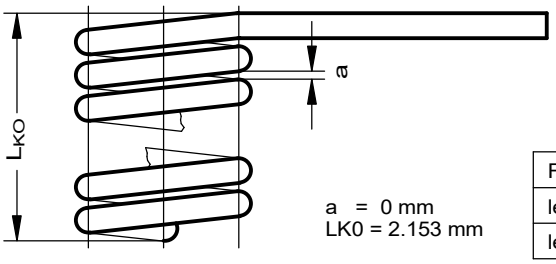

a = 0 mm
LK0 = 2.153 mm

	clamped leg	moved leg
Fixation	fixed clamped	fixed clamped
leg type	tangential	tangential
leg length L	16 ± 0.88	16 ± 0.88

1	nos. of coils	n = 4.25
2	coiling direction	right-hand ☒ / left-hand ○
3	stress	in coiling direction ☒ / against coiling direction ○
4	working angle (lift angle)	alpha h = 20 °
5	stress cycle frequency	n = 1/s
6	Range of working temperature from	0 to 100 deg. C
7	wire- or rod surface	drawn ☒ / rolled ○ / ground ○ / spring shot-blasted ○
8	surface protection:	
9	Material: EN 10270-3-1.4310-NS X10CrNi18-8 (DIN 17224 1.4310) Perm. bending tension Sigma perm. = 1589 MPa calc. with modulus of elasticity E = 190000 MPa	
12	Additional Indications	

10 Perm. Deviation acc.to DIN 2194 Qual.class

	1	2	3	
De, Di, (Dm)	○	☒	○	0.15 mm
delta0	○	☒	○	26.5 deg.
T1	○	☒	○	
T2	○	☒	○	
LK0	○	☒	○	1.07 mm
L leg	○	☒	○	
R bend.	○	☒	○	
phi bend.	○	☒	○	

wire- or rod diameter d: according to the tool used to T4 - EN10218-2

11	Manufacturing Compensation	by:
	a) for one torsion and one angle	delta0, n ○
	b) for one torsion, one angle and delta0	d ○
		De, Di, (Dm) ○
	c) for two torsions and two angles	delta0, n and d ○
		delta0, n and De, Di, (Dm) ○

Cond.	Modification	Date	Name

	Date	Name
Compl.	12/09/2021	
Check		
Stand.		

TEVEMA Amsterdam

Tevema

Torsieveer R Dr0.4 Di5 Nw4.25

TS100330L

Page

Pg.

Copying of this document and giving it to other and the use or communication of the contents therof, are forbidden without express authority. Offenders are liable to the payment of damages. All rights are reserved in the event of the grant of a patent or the registration of a utility model or design.